SB15m

user manual (EN)

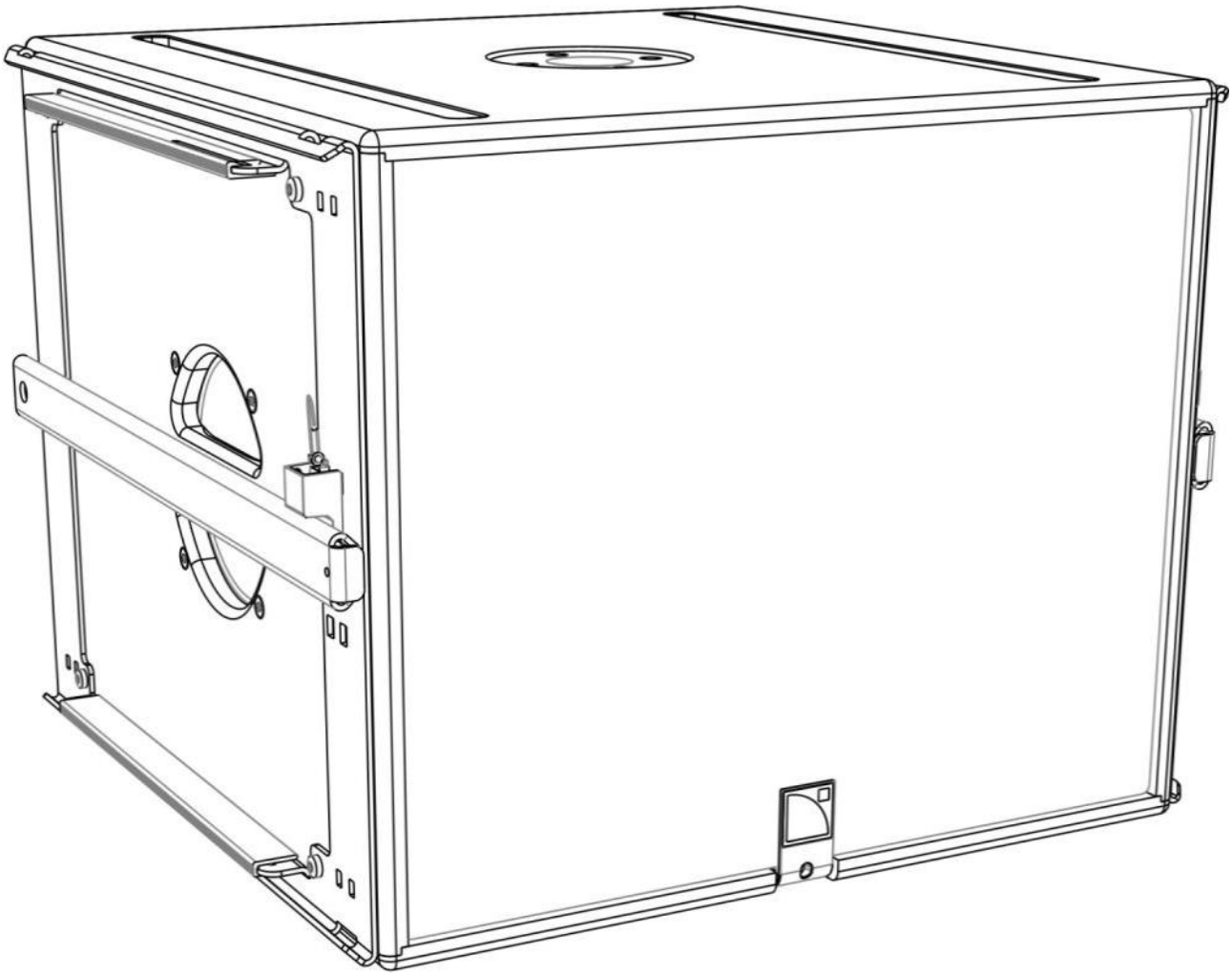

Document reference: SB15m_UM_EN_4.1

Distribution date: August 24, 2022

© 2022 L-ACOUSTICS®. All rights reserved.

No part of this publication may be reproduced or transmitted in any form or by any means without the express written consent of the publisher.

SAFETY INSTRUCTIONS

1. **Read this manual**
2. **Follow all SAFETY INSTRUCTIONS as well as DANGER and OBLIGATION warnings**
3. **Never incorporate equipment or accessories not approved by L-ACOUSTICS®**
4. **Inspect the system before any deployment**
   Perform safety related checks and inspections before any deployment.
   Perform preventive maintenance at least once a year.
   Insufficient upkeep of the product can void the warranty.
   If any safety issue is detected during inspection, do not use the product before performing corrective maintenance.
   Check for issues. A rigging system part or fastener is missing or loose. A rigging system part exhibits: bends, breaks, broken parts, corrosion, cracks, cracks in welded joints, deformation, denting, wear, holes. A safety cue or label is missing.
5. **Read all the related PRODUCT INFORMATION documents before exploiting the system**
   The product information document is included in the shipping carton of the related system component.
6. **Read the RIGGING MANUAL before installing the system**
   Use the rigging accessories described in the rigging manual and follow the associated procedures
7. **Beware of sound levels**
   Do not stay within close proximity of loudspeakers in operation and consider wearing earplugs.
   Loudspeaker systems are capable of producing very high sound pressure levels (SPL) which can instantaneously lead to permanent hearing damage to performers, production crew and audience members. Hearing damage can also occur with prolonged exposure to sound: 8 h at 90 dB(A), 30 min at 110 dB(A), less than 4 min at 130 dB(A).

SYMBOLS

The following symbols are used in this document:

DANGER
This symbol indicates a potential risk of harm to an individual or damage to the product.
It can also notify the user about instructions that must be strictly followed to ensure safe installation or operation of the product.

OBLIGATION
This symbol notifies the user about instructions that must be strictly followed to ensure proper installation or operation of the product.

INFORMATION
This symbol notifies the user about complementary information or optional instructions.

WELCOME TO L-ACOUSTICS®

Thank you for choosing the L-ACOUSTICS® **SB15m subwoofer enclosure**.

This document contains essential information on using the system properly. Carefully read this document in order to become familiar with the system.

As part of a continuous evolution of techniques and standards, L-ACOUSTICS® reserves the right to change the specifications of its products and the content of its document without prior notice.

Please check the L-ACOUSTICS® web site on a regular basis to download the latest document and software updates: www.l-acoustics.com.

CONTENTS

SB15m SUBWOOFER ENCLOSURE **4**

1 SYSTEM COMPONENTS **5**

1.1 Loudspeaker enclosure 5
1.1 Powering and driving system 5
1.3 Loudspeaker cables 5
1.4 Rigging element 5
1.5 Software application 5

2 LOUDSPEAKER CONFIGURATIONS **7**

2.1 Standard configuration 7
2.2 Cardioid configuration 8

3 LOUDSPEAKER CONNECTION **9**

3.1 Connectors 9
3.2 Connection to LA4 / LA4X 10
3.3 Connection to LA8 11

APPENDIX A PRESET DESCRIPTION **13**

[SB15_100] 13
[SB15_100_C] 13

APPENDIX B RECOMMANDATION FOR SPEAKER CABLES **13**

APPENDIX C SPECIFICATIONS **14**

SB15m SUBWOOFER ENCLOSURE

The SB15m is the recommended subwoofer for the KIVA system and the XT coaxial series from L-ACOUSTICS®. It allows extending the system operating frequency range down to 40 Hz.
The SB15m features one direct radiating 15” speaker in a bass reflex tuned enclosure. It provides impact, sensitivity, low thermal compression and reduced distortion. The vent features a progressive profile allowing laminar airflow and reduced turbulence noise even at the highest operating levels. These combined properties contribute to the sonic qualities of the SB15m in terms of precision and musicality. The cabinet is made of first grade Baltic birch plywood to ensure maximum acoustical and mechanical integrity.
SB15m subwoofers can be flown or ground-stacked as a standalone array or within a vertical SB15m/KIVA array. A pole-mount socket is integrated into the cabinet, for the mounting of one XT enclosure or two KIVA enclosures.

The SB15m is driven and amplified by the LA4X or the LA8 controller. These ensure linearization, protection and optimization for the loudspeaker system in its different configurations, cardioid included.

1 SYSTEM COMPONENTS

The system approach developed by L-ACOUSTICS® consists in offering a global solution that guarantees the highest and most predictable level of performance at any step of loudspeaker system deployment: modeling, installation, and operation. A complete L-ACOUSTICS® system includes enclosures, amplified controllers, cables, rigging system and software applications.

1.1 Loudspeaker enclosure

SB15m High-power subwoofer

Loudspeaker system design
Sound design aspects are beyond the scope of this document. However, the various applications of the system will be based on the loudspeaker configurations presented in this document.

1.2 Powering and driving system

LA4, LA4X, LA8, LA12X — Amplified controller with DSP, preset library and networking capabilities

Operating instructions
Refer to the **LA4, LA4X, LA8 or LA12X user manuals.**

1.3 Loudspeaker cables

DO cables (DO.7, DO10, DO25)	8-point PA-COM® loudspeaker cables (4 mm² section). Respective lengths of 0.7 m/2.3 ft, 10 m/32.8 ft, and 25 m/82 ft.
DOSUB-LA8	Breakout cable for four passive enclosures. 8-point PA-COM® to 4 × 2-point SpeakON® (4 mm² section).
SP cables (SP.7, SP5, SP10, SP25)	4-point SpeakON® loudspeaker cables (4 mm² section). Respective lengths of 0.7 m/2.3 ft, 5 m/16.4 ft, 10 m/32.8 ft and 25 m/82 ft.
SP-Y1	Breakout cable for two passive enclosures. 4-point SpeakON® to 2 × 2-point SpeakON® (2.5 mm² section). Provided with CC4FP adapter.

Information about the connection of the enclosures to the LA amplifiers is given in this document.
Refer to the **LA4, LA4X**, **LA8, or LA12X owner's manuals** for detailed instructions about the whole cabling scheme, including modulation cables and network.

1.4 Rigging element

Rigging elements or procedures are not presented in this document.
Refer to the **Kiva II owner's manual** or **SB15m rigging manual**.

1.5 Software application

SOUNDVISION — Proprietary acoustical and mechanical 3D modeling software.

LA NETWORK MANAGER — Remote control and monitoring of amplified controllers

Using L-ACOUSTICS® software
Refer to the **SOUNDVISION user manual** and the **LA NETWORK MANAGER tutorial**.

SB15m

LA4X

LA4

LA8

DOSUB-LA8

DO.7

DO10

DO25

SPY1

SP7

SP5

SP10

SP25

Soundvision

LA Network Manager

SB15m system components (excluding rigging elements and modulation cables)

2 LOUDSPEAKER CONFIGURATIONS

2.1 Standard configuration

The standard configuration corresponds to the use of subwoofers as single elements or as standard subwoofer arrays. In this configuration the system operates with an omni-directional directivity pattern.

The [SB15_100] preset offers a 100 Hz upper frequency limit.

The SB15m subwoofers are driven by the LA4, LA4X, LA8, or LA12X amplified controllers.

SB15m in standard configuration

[PRESET] ▶ [SB15_100]

LF extension (-10 dB): 40 Hz

Directivity pattern

Omni-directional

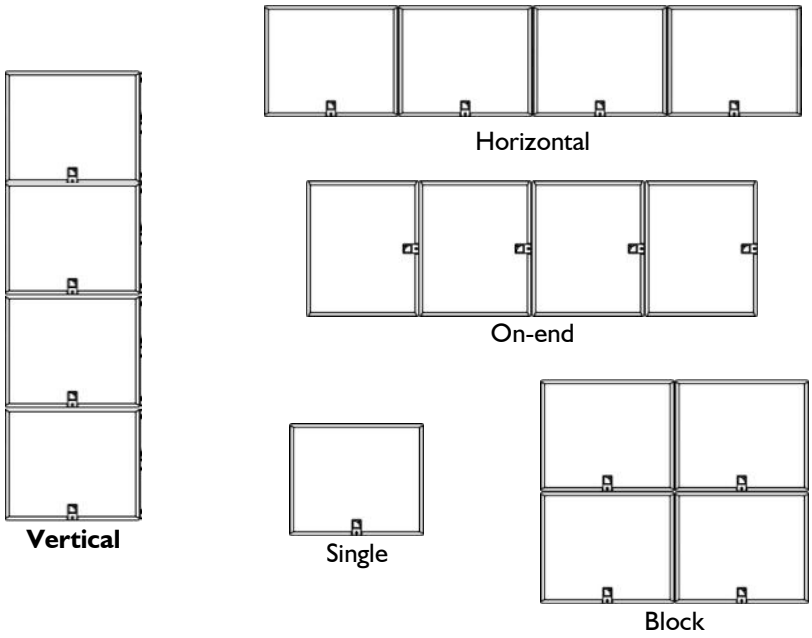

Delay settings
When combining a line source with subwoofers, delays may have to be added to the presets. Refer to the **PRESET GUIDE** to obtain the pre-alignment delay values.

Place the subwoofer enclosures side by side. If not possible, the maximum distance between two adjacent acoustic centers must be 1.7 m.

2.2 Cardioid configuration

The cardioid configuration corresponds to the use of subwoofers as cardioid subwoofer arrays. In this configuration, the system produces a rear SPL rejection.

The [SB15_100_C] preset features a 100 Hz upper frequency limit and delay settings optimized for cardioid SB15m arrays.

The SB15m subwoofers are driven by the LA4, LA4X, LA8, or LA12X amplified controllers.

SB15m in cardioid configuration

[PRESET] ▶ [SB15_100_C]

LF extension (-10 dB): 40 Hz

Directivity pattern
Horizontal symmetric
Central rear rejection

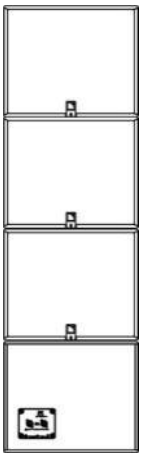

Vertical

Directivity pattern
Horizontal asymmetric
Rear rejection on the side of the reversed subwoofer

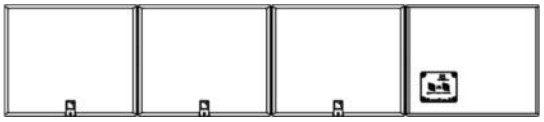

Horizontal

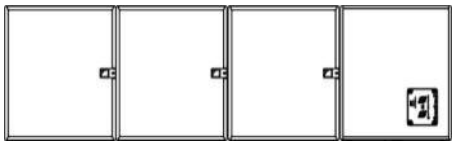

On-end

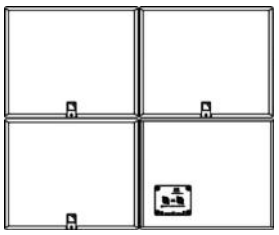

Block

Delay settings
When combining a line source with subwoofers, delays may have to be added to the presets. Refer to the **PRESET GUIDE** to obtain the pre-alignment delay values.

OBLIGATION
Place the subwoofer enclosures side by side. If not possible, the maximum distance between two adjacent acoustic centers must be 1.7 m.

3 LOUDSPEAKER CONNECTION

3.1 Connectors

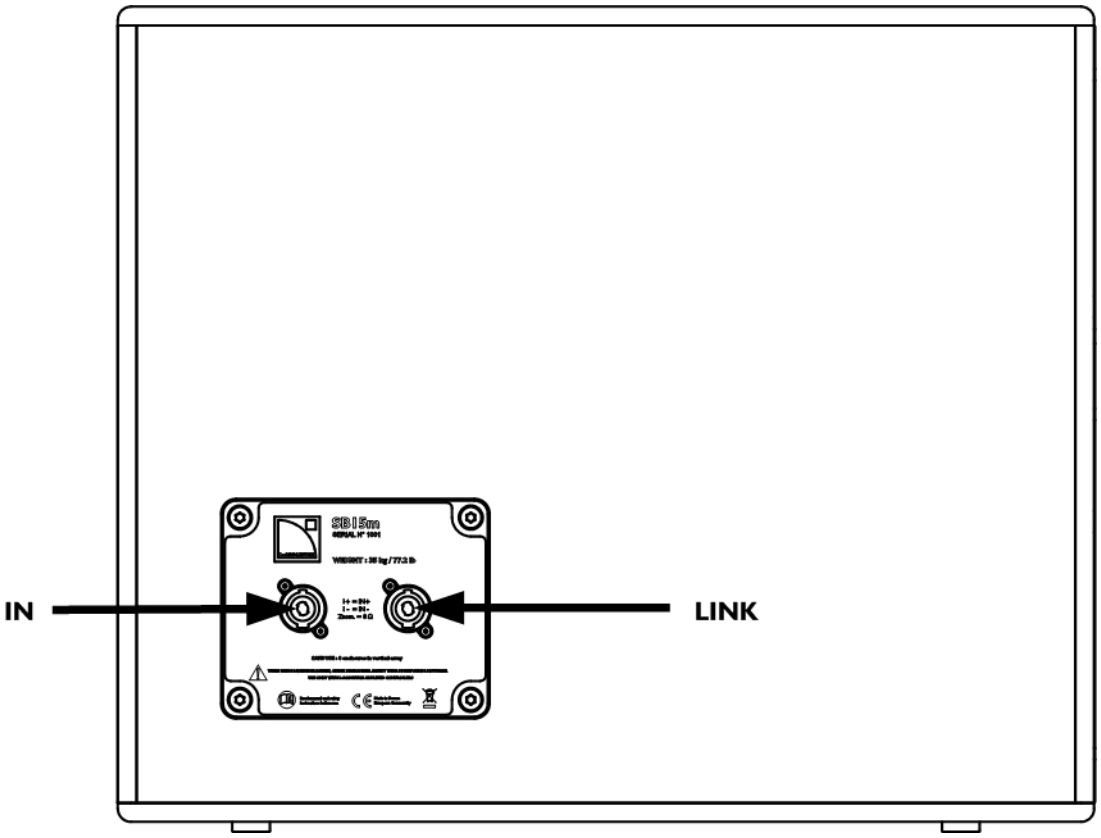

The SB15m subwoofer is equipped with two 4-point SpeakON® connectors.

The IN connector allows receiving the audio signal and the LINK connector allows routing it to another SB15m enclosure in parallel.

The SB15m connection in parallel is only possible with the LA8 amplified controller.

Internal pinout for L-ACOUSTICS® subwoofer enclosures

SpeakON® points	1+	1 -	2 +	2 -
Transducer connectors	LF+	LF -	Not used	Not used

3.2 Connection to LA4 / LA4X

Maximum of 4 enclosures per LA4 / LA4X
1 SB15m can be connected to each output channel on the LA4. Therefore, a single LA4 amplified controller can drive up to 4 enclosures.

Cardioid configuration
Connect the reversed subwoofer to OUT 1 to use the cardioid preset.

Impedance load
8 Ω for 1 SB15m.

To connect the SB15m to the LA4 / LA4X, 2 options are available.

Option A

▶ Use **SP cables** (SP.7, SP5, SP10 or SP25) to connect one enclosure to each of the four LA4 / LA4X output channels.

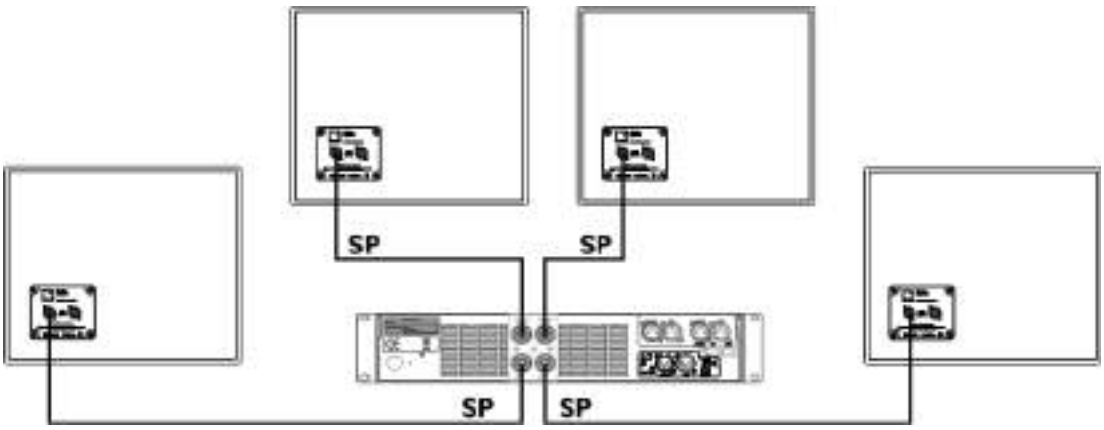

LA4 / LA4X option A maximum configuration

Option B

▶ Connect an **SP cable** (SP.7, SP5, SP10 or SP25) to the OUT1/OUT2 and OUT3/OUT4 connectors of the LA4 / LA4X.
▶ Use a **CC4FP adapter** to connect an **SP-Y1 cable** and separate the two output channels.
▶ Apply the same cabling scheme for the OUT3/OUT4 connector.

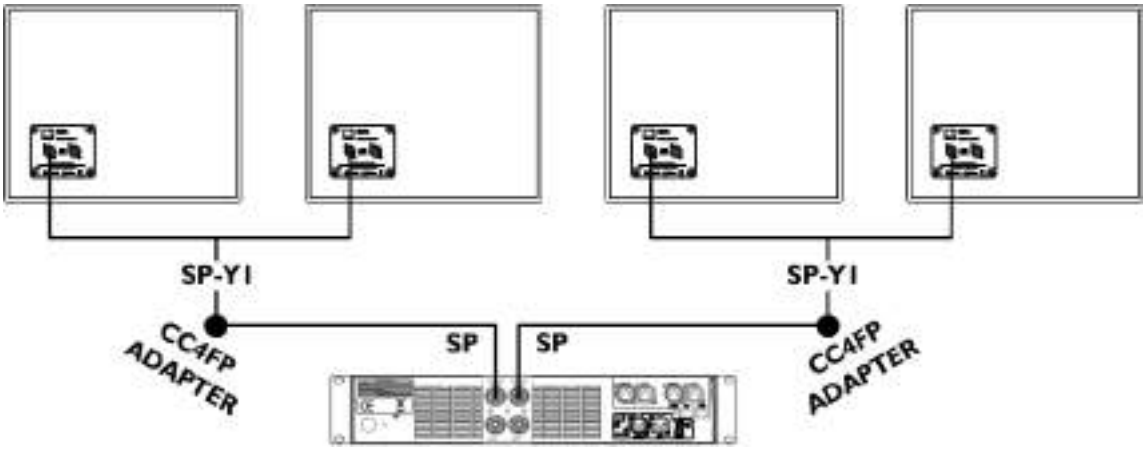

LA4 / LA4X option B maximum configuration

3.3 Connection to LA8

Maximum of 6 enclosures per LA8
LA8 can drive up to 2 SB15m per output, but no more than 6 per controller.

Cardioid configuration
Connect the reversed subwoofers to OUT 1 to use the cardioid preset.

Impedance load
8 Ω for 1 enclosure, 4 Ω for 2 enclosures.

To connect the SB15m to the LA8, 2 options are available.

Option A

- ▶ Connect a **DO cable** (DO.7, DO10 or DO25) to the LA8 PA-COM® connector
- ▶ Use the **DOSUB-LA8** to separate the four output channels.
- ▶ If necessary, use **SP cables** to connect additional similar enclosures in parallel with the first ones.

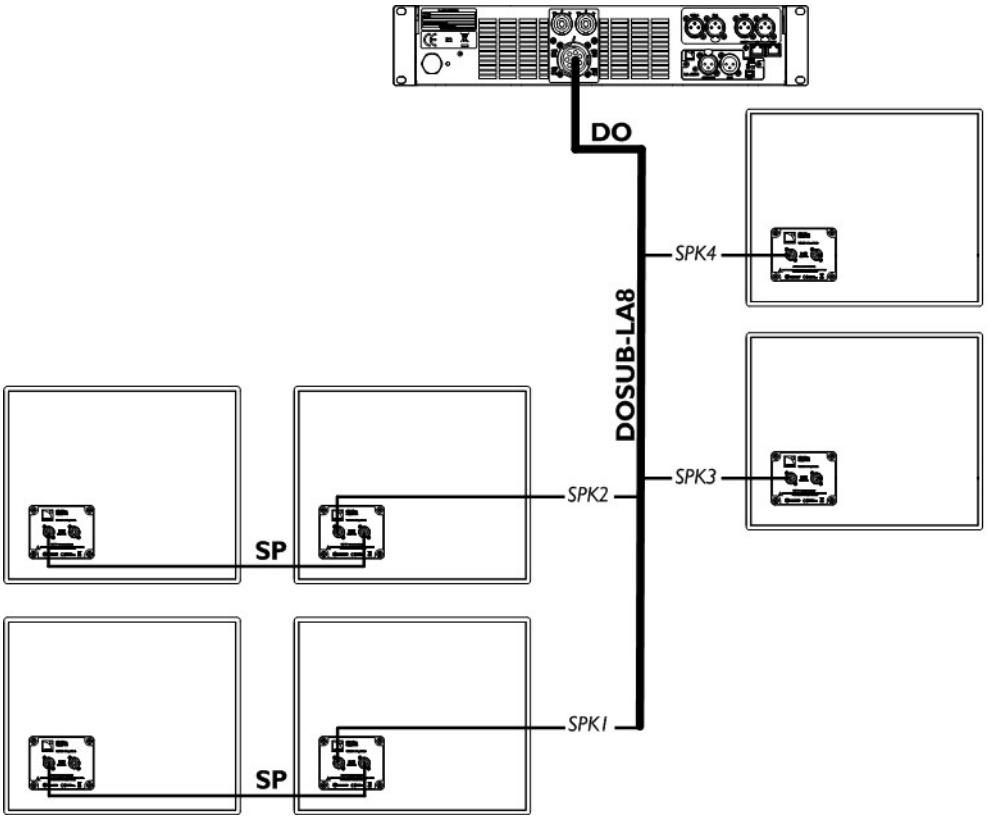

LA8 option A maximum configuration

Option B

With various enclosure types connected to the same amplifier, this cabling scheme needs a custom preset.

▶ Connect an **SP** cable (SP.7, SP5, SP10 or SP25) to the OUT1/OUT2 and OUT3/OUT4 LA8 SpeakON® connectors.
▶ Use a **CC4FP adapter** to connect an **SP-Y1** cable and separate the two output channels.
▶ If necessary, use **SP cables** to connect additional SB15m enclosures in parallel with the first ones.

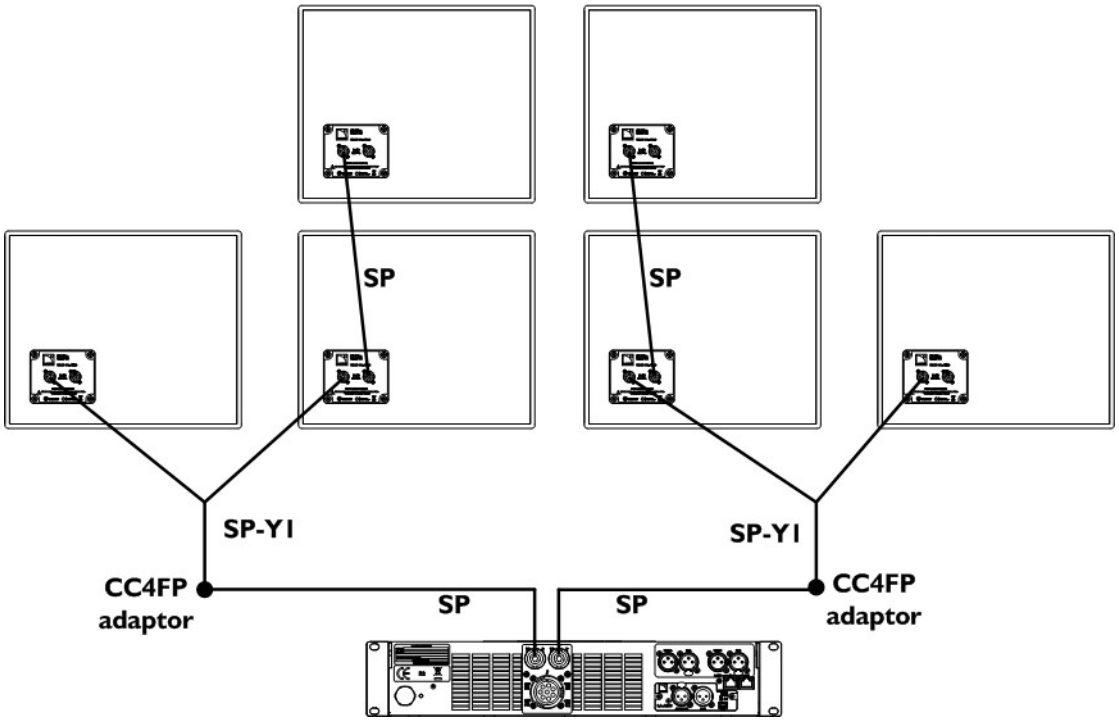

LA8 option B maximum configuration

APPENDIX A PRESET DESCRIPTION

[SB15_100]

The [SB15_100] preset provides a 100 Hz upper frequency limit for the SB15m.

It is used for SB15m subwoofers deployed as single elements or arrays in standard configuration.

Loudspeaker elements	Amplifier outputs	Channels	Default parameters				
			Routing	Gain	Delay	Polarity	Mute
SB15m	OUT 1	SB	IN A	0 dB	0 ms	+	ON
SB15m	OUT 2	SB	IN A	0 dB	0 ms	+	ON
SB15m	OUT 3	SB	IN B	0 dB	0 ms	+	ON
SB15m	OUT 4	SB	IN B	0 dB	0 ms	+	ON

[SB15_100_C]

The [SB15_100_C] preset provides a 100 Hz upper frequency limit for the SB15m.

It features optimized delay settings for subwoofers arrays deployed in cardioid configuration.

Loudspeaker elements	Amplifier outputs	Channels	Default parameters				
			Routing	Gain	Delay	Polarity	Mute
Reversed SB15m	OUT 1	SR	IN A	0 dB	0 ms	+	ON
SB15m	OUT 2	SB					ON
SB15m	OUT 3	SB					ON
SB15m	OUT 4	SB					ON

APPENDIX B RECOMMANDATION FOR SPEAKER CABLES

Cable quality and resistance
Only use high-quality fully insulated speaker cables made of stranded copper wire.
Use cables of gauge offering low resistance per unit length and keep the cables as short as possible.

The following table provides the recommended maximum length depending on the cable cross-section and on the impedance load connected to the amplifier.

			Recommended maximum length					
Cable cross-section			8 Ω load		4 Ω load		2.7 Ω load	
mm^2	SWG	AWG	m	ft	m	ft	m	ft
2.5	15	13	30	100	15	50	10	33
4	13	11	50	160	25	80	17	53
6	11	9	74	240	37	120	25	80
10	9	7	120	390	60	195	40	130

SPECIFICATIONS
SB15m

Description	Subwoofer enclosure, amplified by LA4X / LA8 / LA12X	
Low frequency limit (-10 dB)	40 Hz ([SB15_100] preset)	
Maximum SPL[1]	137 dB ([SB15_100] preset)	
RMS power handling	600 W	
Transducer	1 × 15" weather-resistant, bass-reflex	
Nominal impedance	8 Ω	
Connectors	IN: 1 × 4-point SpeakON®	LINK: 1 × 4-point SpeakON®
Rigging components	Integrated pole-mount socket Coupling bars stored at handle position	

Dimensions

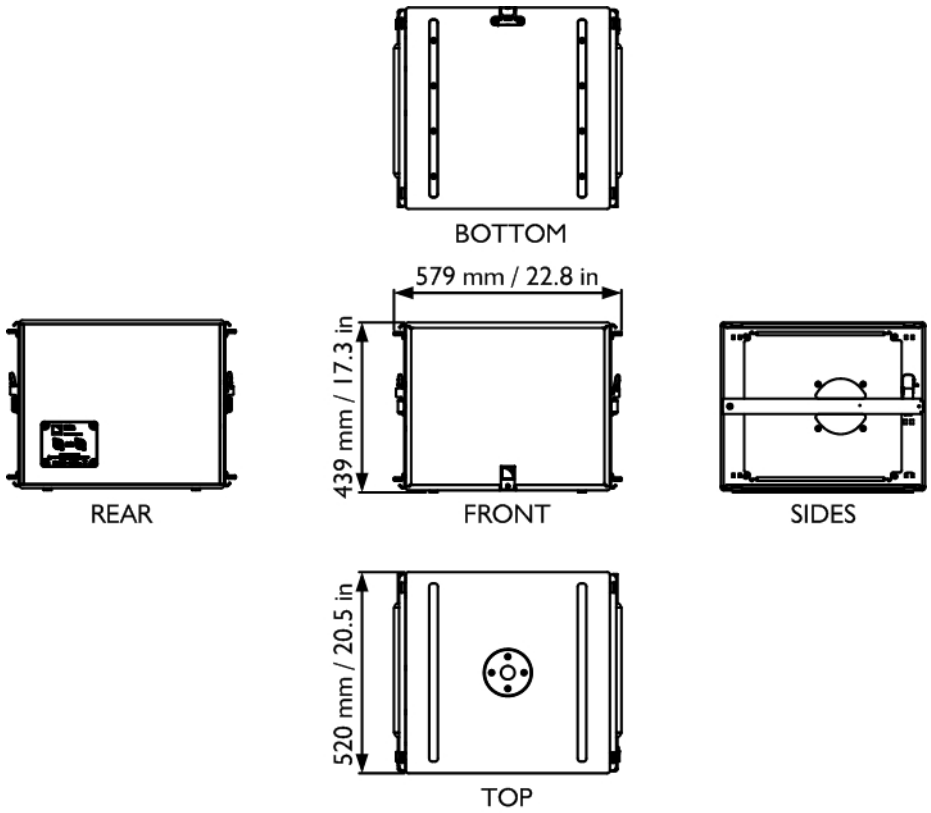

Physical data	Weight (net):	36 kg / 79.4 lb
	Cabinet:	Baltic birch plywood
	Finish:	Dark Grey brown (Pantone 426C) Pure white (RAL 9010®) Custom RAL code on special order
	Front:	Steel grill with anti-corrosion coating Airnet® acoustically neutral fabric
	Protection Rating:	IP55
	Rigging components:	High strength steel with anti-corrosion coating

[1] Peak level measured at 1 m in half space conditions using pink noise with crest factor 4 (preset specified in brackets).

L-Acoustics
13 rue Levacher Cintrat - 91460 Marcoussis - France
+33 1 69 63 69 63 - info@l-acoustics.com
www.l-acoustics.com

L-ACOUSTICS
GROUP